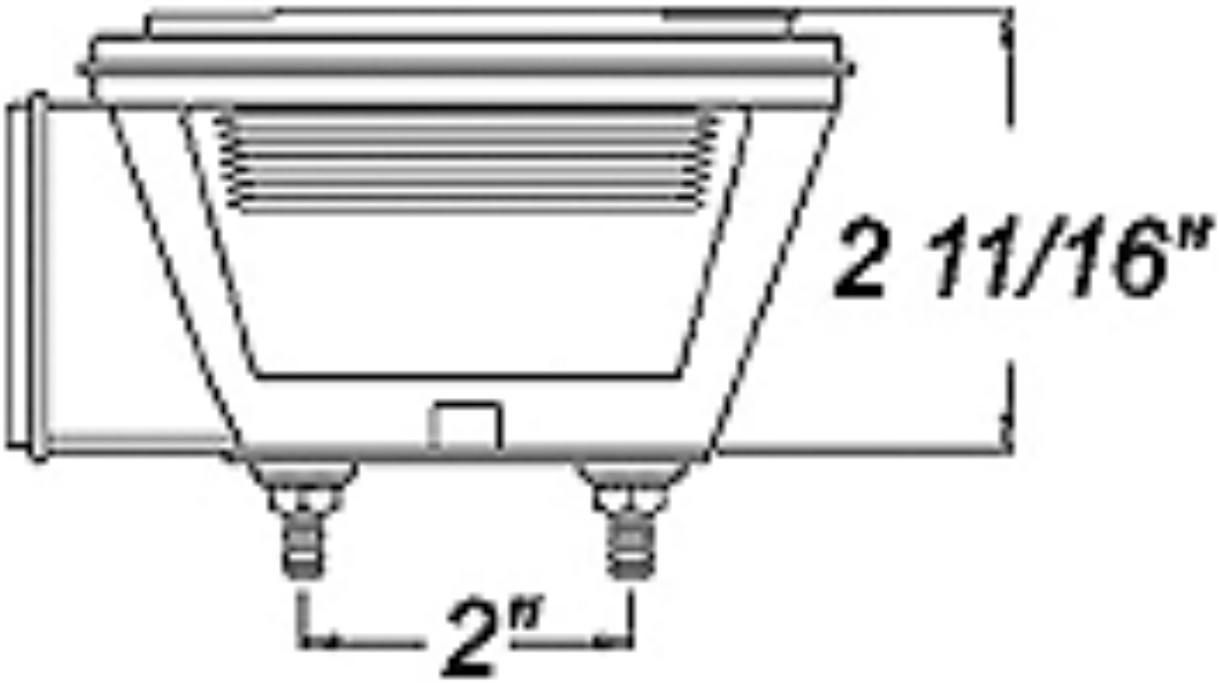
2 11/16"
2"

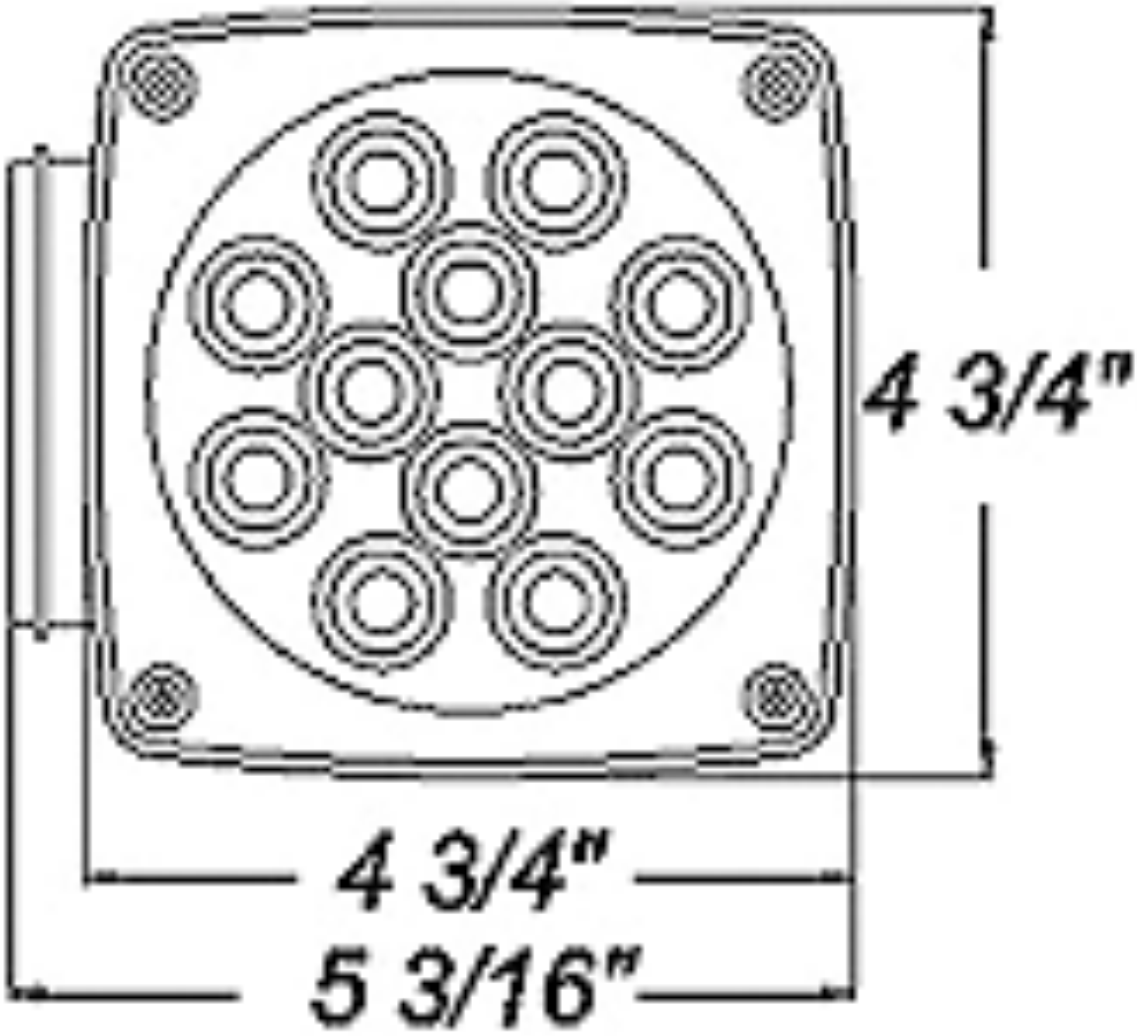
4 3/4"
4 3/4"
5 3/16"