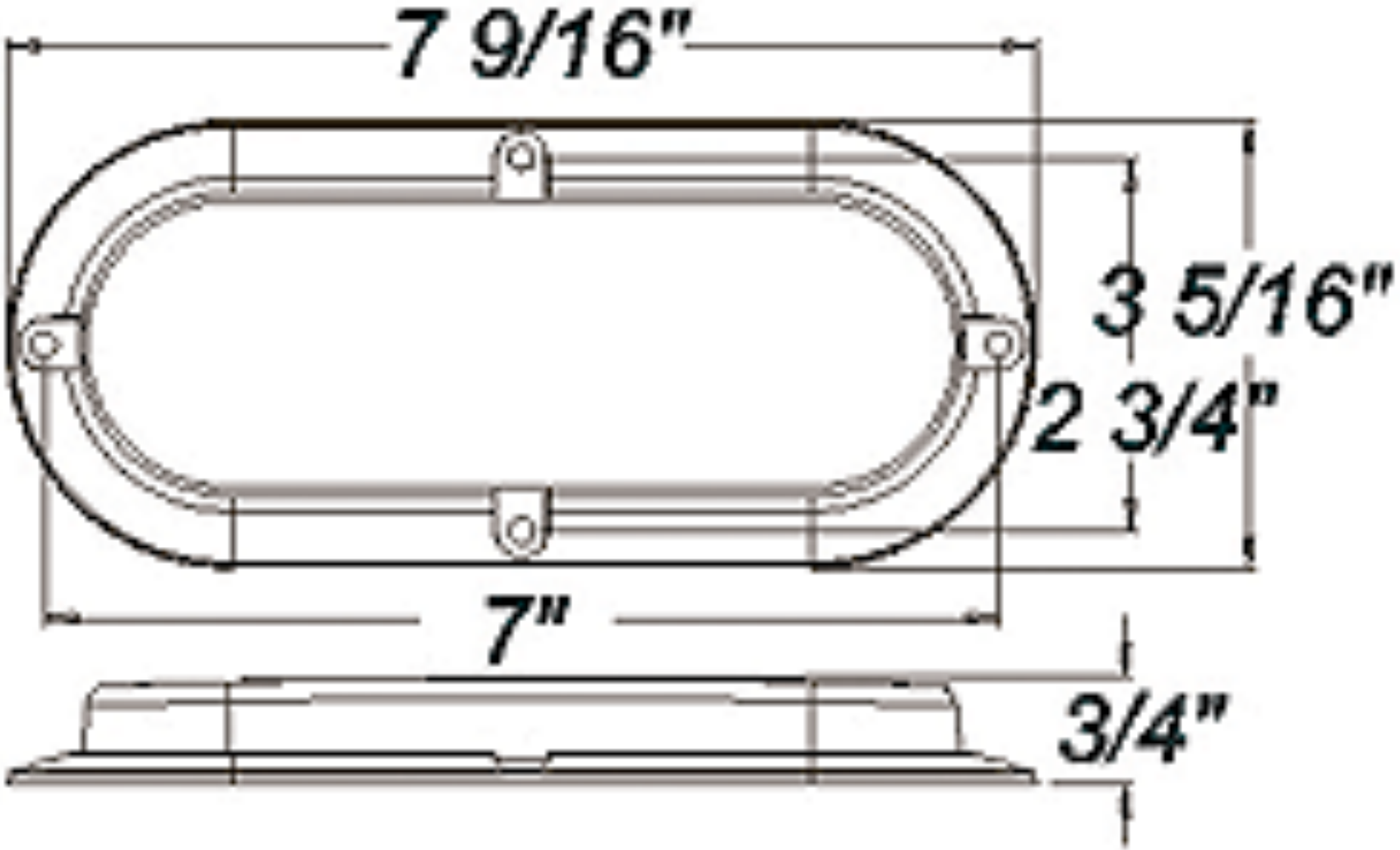
7 9/16"
3 5/16"
2 3/4"
7"
3/4"