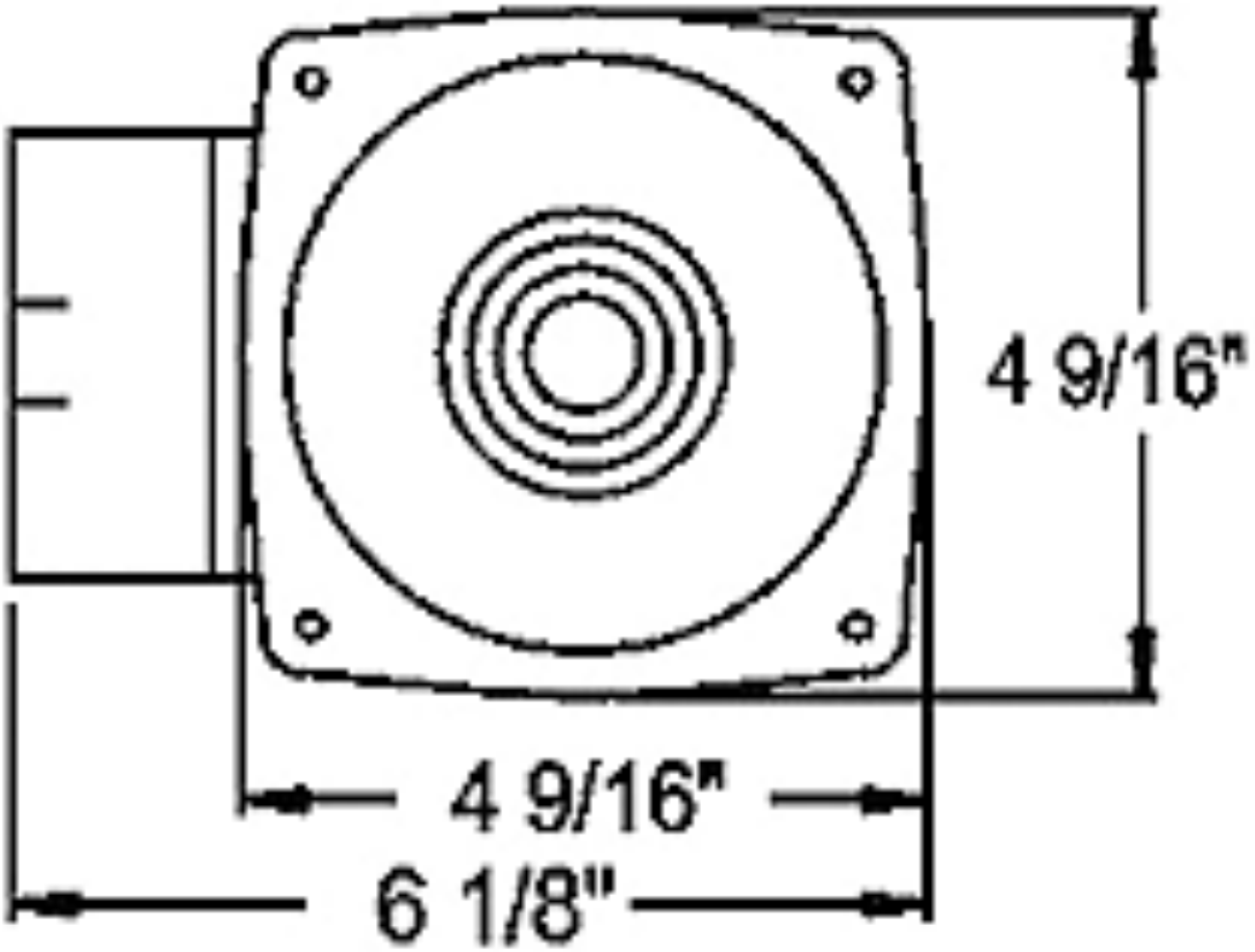
4 9/16"
4 9/16"
6 1/8"

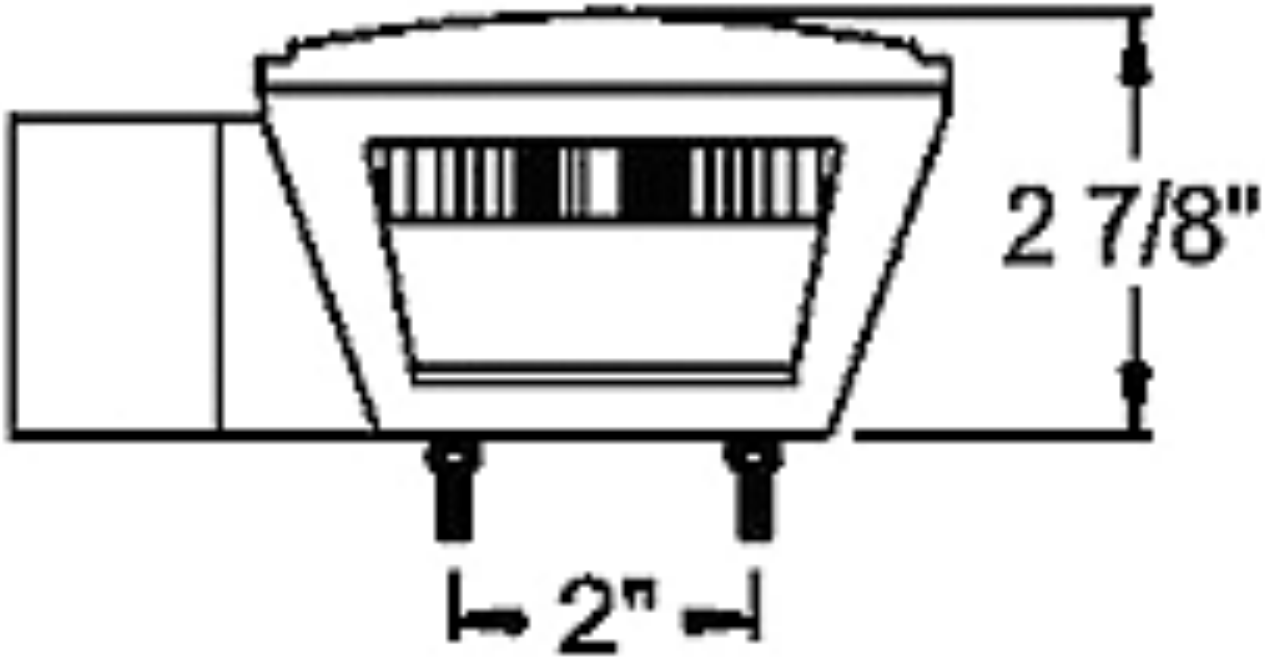
2 7/8"
2"